WONDER | REAR LOUNGE

2025 MANUAL



LEISURE TRAVEL VANS

⚠ WARNING

Operating, servicing and maintaining a passenger vehicle, pickup truck, van, or off-highway motor vehicle can expose you to chemicals including engine exhaust, carbon monoxide, phthalates, and lead, which are known to the State of California to cause cancer and birth defects or other reproductive harm. To minimize exposure, avoid breathing exhaust, do not idle the engine except as necessary, service your vehicle in a well-ventilated area and wear gloves or wash your hands frequently when servicing your vehicle.
For more information go to www.P65Warnings.ca.gov/passenger-vehicle

TABLE OF CONTENTS

1. INTRODUCTION
- Supplemental Manual....1-1
- Motorhome Information Kit....1-2
- Options and Equipment....1-2
- Service Assistance....1-2
- Reporting Safety Defects....1-3

2. GENERAL INFORMATION
- Floor Plan....2-1
- Exterior Equipment Location....2-2
- Beds and Seating....2-4
  - Lowering the Murphy Bed....2-4
  - Raising the Murphy Bed....2-4
- TV Location....2-5

3. SCHEMATICS
- Electrical....3-1
  - 12 volt Electrical Reference....3-1
  - 120 Volt Electrical Reference....3-2
  - Electrical Schematic....3-3
- Plumbing....3-8
  - Water lines schematic....3-8
  - Drain line schematic....3-9
- Entertainment....3-10
- Satellite Pre-wire....3-11

1. INTRODUCTION

Congratulations! Thank you for selecting a Leisure Travel Vans Motorhome.

Welcome to the exciting world of motorhome travel and camping, with all the comforts of home with you, while you travel and enjoy the outdoors.

Your motorhome has been designed and manufactured to enhance your travel and camping experience and to provide you with safe, efficient and trouble-free operation.

Before your first drive, become familiar with the operation of the vehicle chassis and all functions and operations of the motorhome. Spend adequate time with your dealer when you take delivery to learn all you can about your new motorhome.

KEEP the Motorhome Information Kit within your motorhome for readily available reference.

PASS this manual, the Chassis Operation Manual and the Motorhome Information Kit to any subsequent operator or owner.

For clarification or further details on any of the enclosed information, please contact:

Your Leisure Travel Vans Dealer or Triple E RV Customer Service at:

Email:	info@tripleerv.com
Toll Free:	877-992-9906
Telephone:	204-325-4361
Fax:	204-325-5241

SUPPLEMENTAL MANUAL

This manual was prepared to aid the operator and occupants in the operation and care of the motorhome by giving specific information about your model. There are many options to Leisure Travel Vans, so ensure that you are familiar with your motorhome's systems and equipment. All operators and occupants of the motorhome should read, understand and follow the instructions in this manual, the vehicle chassis manual & the information contained in the Motorhome Information Kit provided with your new motorhome.

Your motorhome contains a number of systems, components, equipment, and appliances manufactured by vendors that supply components for Triple E RV. These vendors are unrelated to Triple E RV.

Before operating the motorhome for the first time – even if an experienced motorhome operator – read and become familiar with all of the relevant manuals to your motorhome, components, equipment and appliances provided in the Motorhome Information Kit. Your familiarity with the detailed operation of your motorhome will assist in your safe, efficient and trouble-free motorhome operation.

MOTORHOME INFORMATION KIT

The Motorhome Information Kit includes but isn't limited to information on the components, equipment and appliances listed below (based on options selected).

- Refrigerator
- Stove top
- Furnace
- Electrical Panel
- Toilet
- Water Heater
- Water Pump
- Water Filtration
- Vent (roof)
- Fire Extinguisher
- Smoke Detector
- Thermostat
- CO Detector
- Propane Detector
- Gas Regulator
- TV Antenna
- TV/DVD
- Chassis
- Air Conditioner
- Generator
- Stabilizers/Leveling Jacks
- Rear View Monitor
- Inverter
- Entertainment System
- Safety
- Flooring and Countertops
- Electric Step
- Solar Panel
- Surge Protector
- Safe
- Awning

OPTIONS AND EQUIPMENT

Leisure Travel Vans are available in various sizes and floor plan configurations and with differing optional equipment. The equipment, accessories and components described in this manual may not apply in all respects to your motorhome. Read the material and manuals provided in the Motorhome Information Kit for detailed instructions regarding the equipment specific to your motorhome.

SERVICE ASSISTANCE

Your dealer will assist you with any additional information you need and will answer any questions you have about the operation of your motorhome. When it's time to service the vehicle, remember that your dealer knows your motorhome best and is dedicated to your satisfaction. Your dealer will provide quality maintenance and assistance during your period ownership. Triple E RV strongly recommends that you follow a regular maintenance schedule to keep your motorhome functioning at its best.

Call the following numbers if you require warranty assistance while traveling:

Triple E RV: 1-877-992-9906

Canada Sprinter Customer Service:
1-800-387-0100 www.thesprinter.ca

US Sprinter Customer Service:
1-877-762-8267 www.mbsprinterusa.com

Canada Ford Customer Service:
1-800-565-3673 www.ford.ca

US Ford Customer Service:
1-800-392-3673 www.ford.com

Emergency Roadside Service* Call:
1-877-219-3831
4287 Beltline Road, Box 198
Addison, Texas 75001

*This Emergency Roadside Service is available to owner of the motorhome during the first two years after purchase.

REPORTING SAFETY DEFECTS

If you suspect your motorhome has a safety defect that could cause injury or death, immediately contact Triple E RV. Also, contact the National Highway Traffic Safety Administration (NHTSA) in the US or Transport Canada to report your concern.

NHTSA will investigate the concern if there are a number of similar complaints. NHTSA has the authority to order a recall and repair campaign depending on the nature and severity of the problem.

You can reach the NHTSA by calling the Auto Safety Hot-line at 1-800-424-9393 (202-366-0123 in the Washington, DC, area) or by writing to NHTSA, US Department of Transportation, Washington, DC 20590. The hot-line also will provide you with additional information on motor vehicle safety.

In Canada, call 1-800-333-0510 or write to Transport Canada and Road Safety, 2780 Sheffield Road, Ottawa, Ontario K1B 3V9.

2. GENERAL INFORMATION

FLOOR PLAN

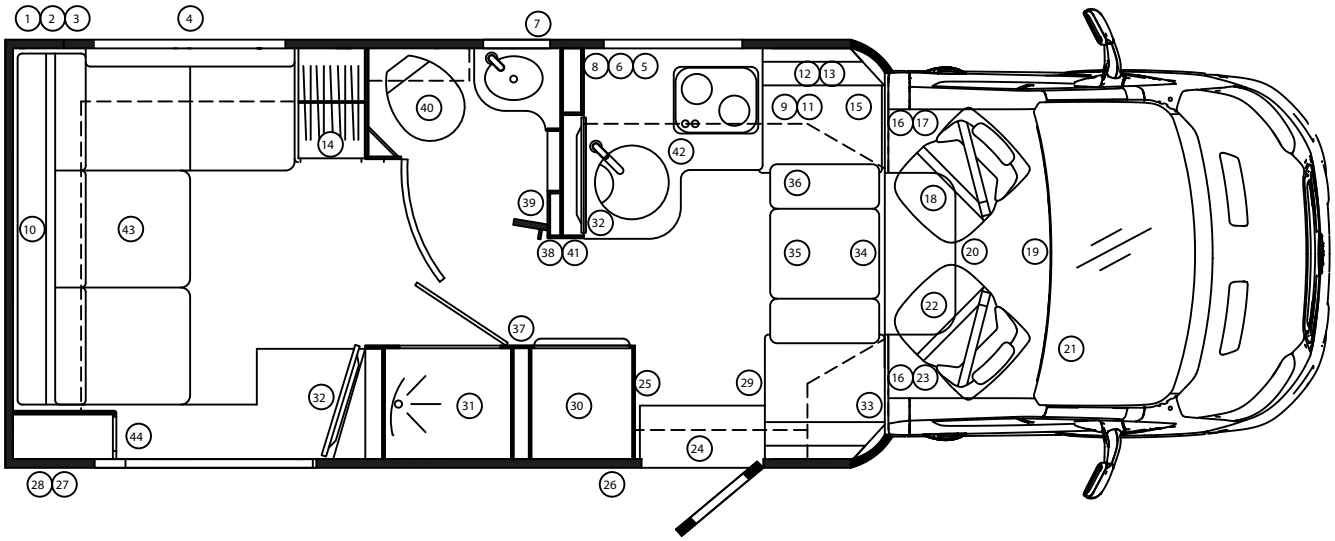

① Macerator Option Under Floor
② Sewer Hose Under Floor
③ Utility Center Under Floor
④ Egress Window
⑤ Water Pump Under Galley
⑥ Water Heater and Furnace Under Galley
⑦ Shore Power Plug
⑧ Tank Flush Non Return Valve Behind Access Cover in Over Head Cabinet
⑨ Ignition 7.5A Fuse under seat
⑩ Murphy Bed
⑪ Step Switch, battery heat, G12 RTC shared 5A fuse under seat
⑫ Satellite Option Prewire and Component Connection Plate in Overhead Cabinet
⑬ TV Antenna Booster/WIFI Switch under Overhead
⑭ Wardrobe
⑮ Transfer Switch/Surge Protector Under Dinette Seat
⑯ USB Plug on Cab Upright
⑰ Battery 7.5A Fuse Behind Captains Seat
⑱ Chassis Batteries Under Captain Seat
⑲ Ford 12 Volt Plug and USB Plug
⑳ Swivel Seats
㉑ Optional Rear Door Lock/Unlock relay behind glove box
㉒ DC/DC Charger under seat
㉓ Awning Switch on pillar behind passenger
㉔ Water Heater Dial above Entrance Door
㉕ Battery Disconnect Switch on Cabinet Wall
㉖ Coach Batteries In Compartment Under Floor (Solar Panel 30A fuse behind batteries)
㉗ Generator Option Under Floor
㉘ Exterior BBQ Connection Under Floor
㉙ Fire Extinguisher
㉚ Fridge Below and Microwave Above
㉛ Shower
㉜ TV
㉝ MultiPlex Display on Cab Upright
㉞ Smoke Alarm on Ceiling
㉟ Dinette
㊱ Breaker Panel
㊲ Propane/Carbon Monoxide Detector on Cabinet Face
㊳ Thermostat Sensor on Pantry Wall
㊴ MultiPlex G12 Panel Board behind Access cover
㊵ Toilet
㊶ Pantry
㊷ Galley
㊸ Sofa
㊹ USB Plug on Bed Side

EXTERIOR EQUIPMENT LOCATION

PASSENGER SIDE VIEW

1. Light
2. External Receptacle
3. Generator Compartment
4. BBQ Hook-Up
5. Storage Compartment
6. Electrical Step
7. Awning
8. Ladder (Optional)
9. Inverter/Battery Compartment

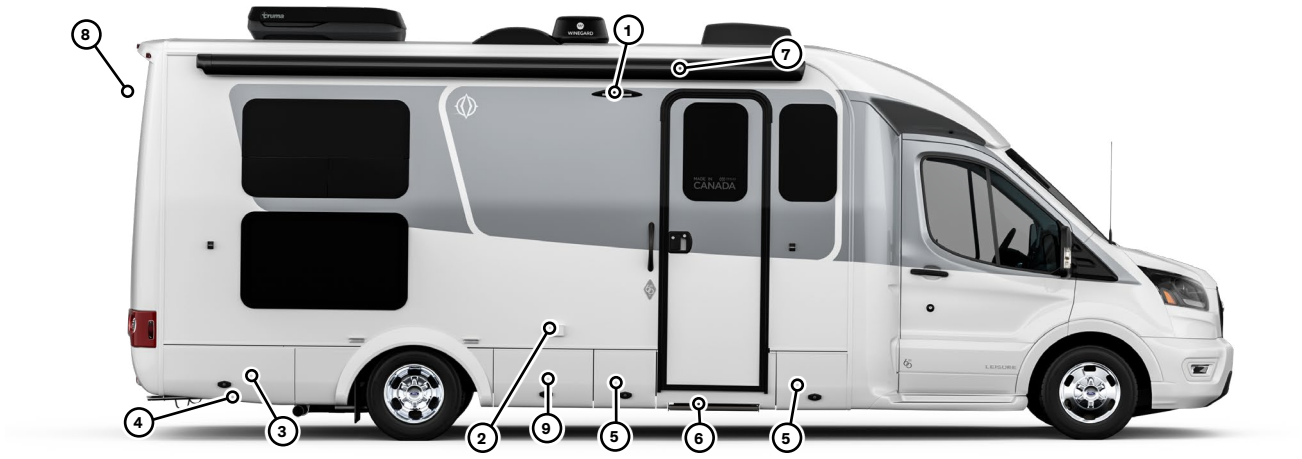

DRIVER SIDE VIEW

1. Sewer Termination
2. Fuel Fill
3. Sewer Hose (Behind Doors)
4. Shore Power Connection
5. Utility Center
6. Storage Compartment
7. Propane Shut-Off
8. Water Heater
9. Furnace Vent

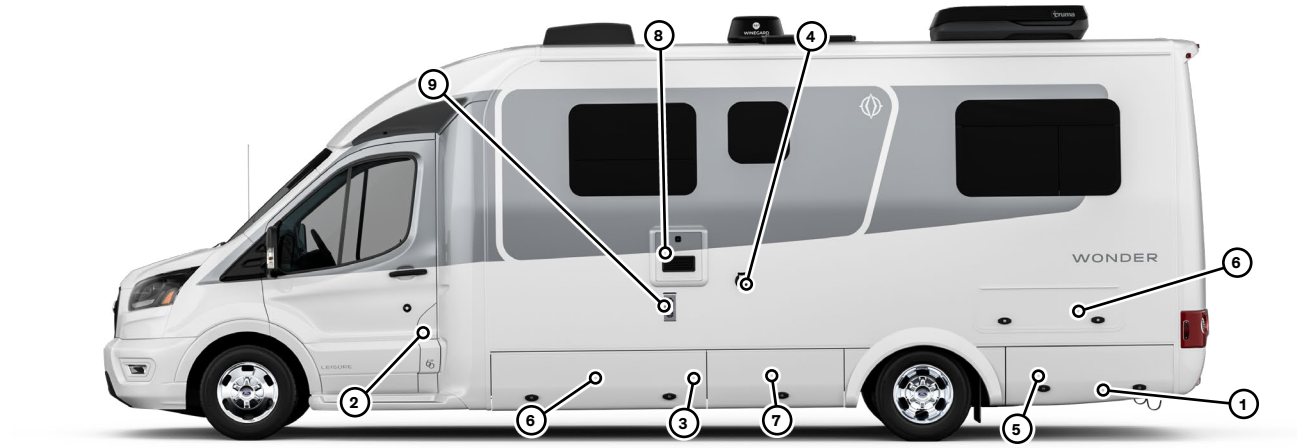

TOP VIEW

1. Skylight
2. Stack Vent
3. Roof Vent
4. Satellite (Optional)
5. Solar Panels (Optional)
6. A/C
7. Radio Antenna
8. TV/WiFi Antenna

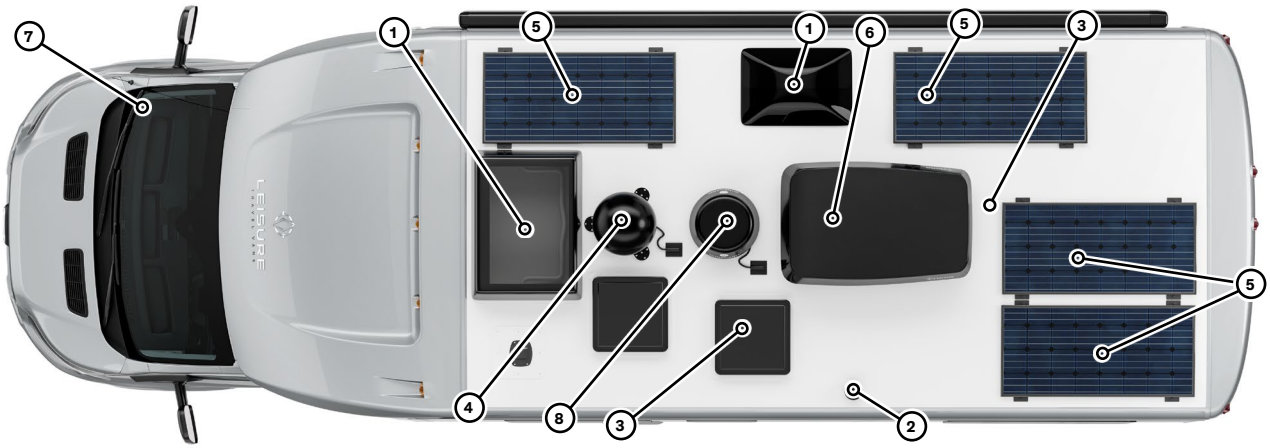

BEDS AND SEATING

LOWERING THE MURPHY BED

1. Remove the back rests and seat cushions (10) and set aside.

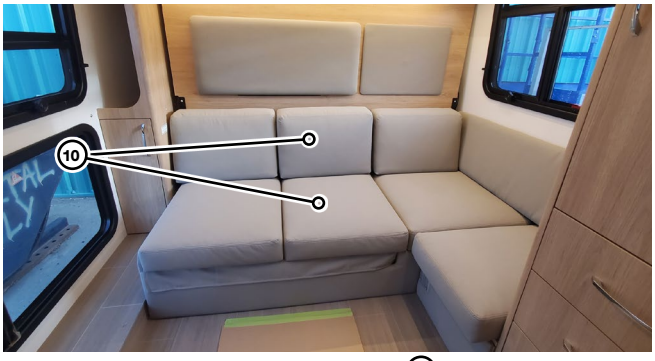

2. Raise the padded head rest (11) until it click in to place.

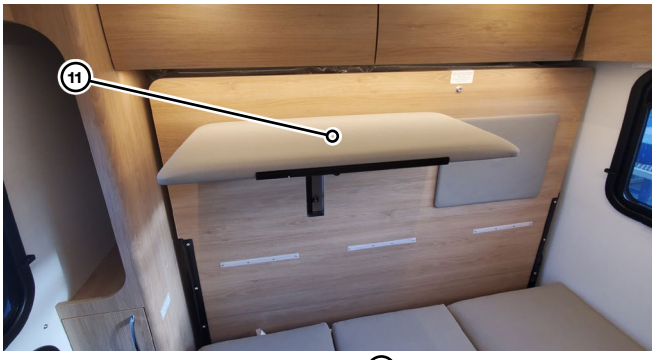

3. Disengage the travel lock (12) located on the driver side of the bed by raising the arm up.

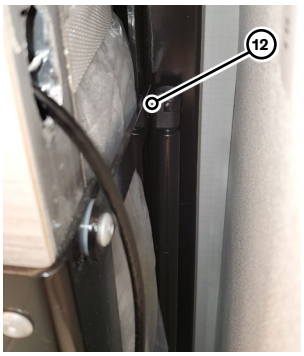

4. Carefully lower the bed until it is resting on the floor, and the locking mechanism is engaged.

⚠ WARNING

Always ensure that the bed is locked when in the lower position. Failure to do so could allow the bed to close while occupied, causing serious injury or death.

RAISING THE MURPHY BED

1. Press the lock release button (13) under the bed and lift the bed.



2. Engage the side locking mechanism (12) once the bed is upright.

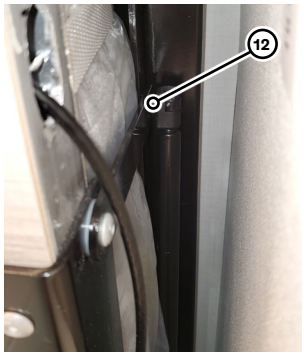

⚠ CAUTION

Always ensure that the bed is locked when in the upright position. Failing to do so will allow the bed to fall, causing damage or personal harm.

3. Lower the padded headrest by pushing up in the center of the support (14), and lowering the headrest.

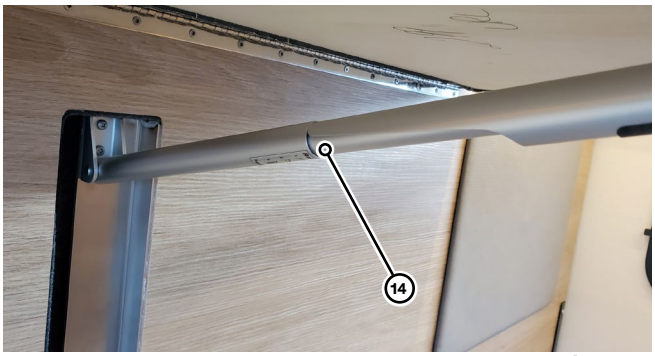

4. Replace the seat cushion and back rests (10).

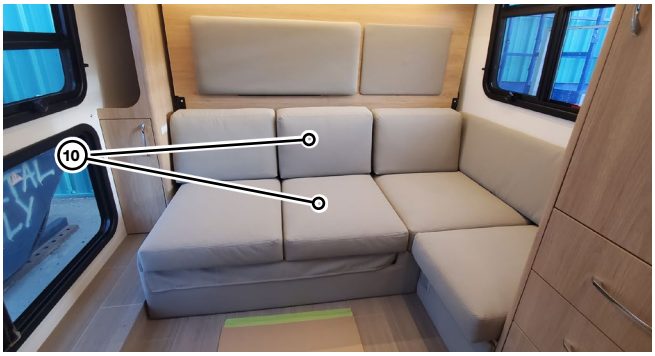

TV LOCATION

The Wonder RL TV is located in the rear lounge section of the coach (15), as well as the wall next to the galley (16).





3. SCHEMATICS

ELECTRICAL

12 VOLT ELECTRICAL REFERENCE

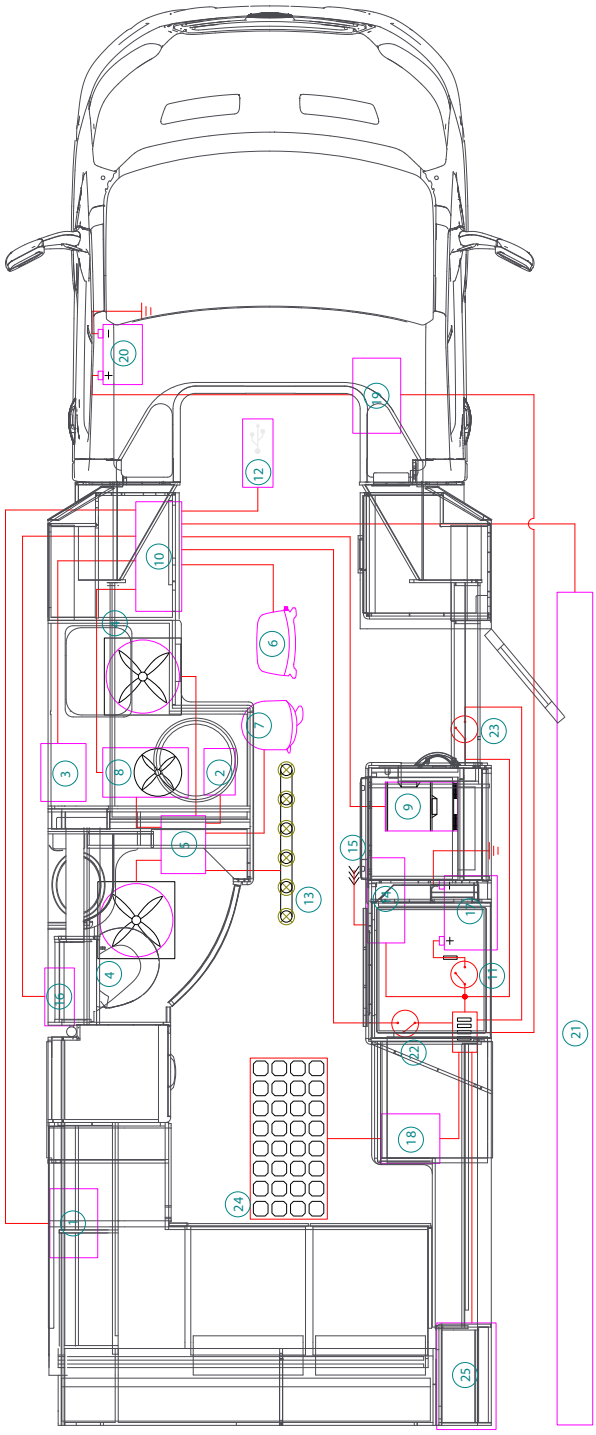

W24RL 12V ELECTRICAL WIRING SCHEMATIC

PLEASE REFER TO BREAKER PANEL LABELS FOR EXACT LAYOUT

① Macerator Pump (Optional)
② Water Pump
③ Water Heater
④ Power Roof Vent (Washroom/Galley)
⑤ Multiplex System
⑥ Winegard Connect 2.0
⑦ Satellite Dish (Optional)
⑧ Furnace
⑨ Fridge
⑩ DC Fuse Panel
⑪ Battery Storage Switch
⑫ USB Chargers
⑬ Light Circuits
⑭ Inverter
⑮ 120V AC Power Input
⑯ Macerator Toilet
⑰ RV Batteries
⑱ Solar Charge Controller
⑲ DC/DC Charger
⑳ Chassis Battery
㉑ Awning
㉒ Battery Disconnect
㉓ Lithium Battery Heat Enable Switch
㉔ Solar Panels (200W/400W Optional)
㉕ Generator (Optional)

120 VOLT ELECTRICAL REFERENCE

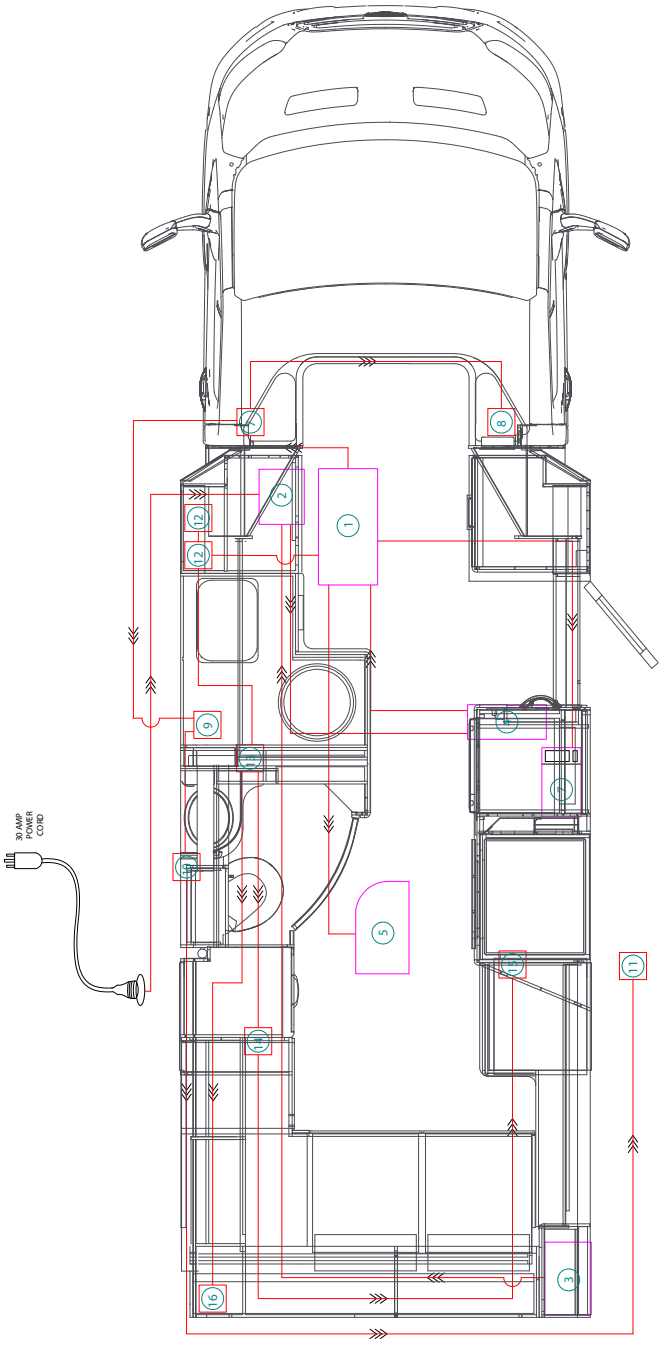

W24RL 30 AMP 120V ELECTRICAL WIRING SCHEMATIC

PLEASE REFER TO BREAKER PANEL LABELS FOR EXACT LAYOUT

① AC Distribution Panel
② Transfer Switch/Surge Protector
③ Generator
④ Inverter/Charger
⑤ Air Conditioner
⑥ Microwave
⑦ Dinette Driver Side Receptacle
⑧ Dinette Pass. Side Receptacle
⑨ Galley Receptacle
⑩ Washroom Receptacle
⑪ Bedroom TV
⑫ Exterior Recetacle
⑬ Front TV
⑭ First Bed Receptacle
⑮ Bedroom TV
⑯ Second Bed Receptacle

ELECTRICAL SCHEMATIC

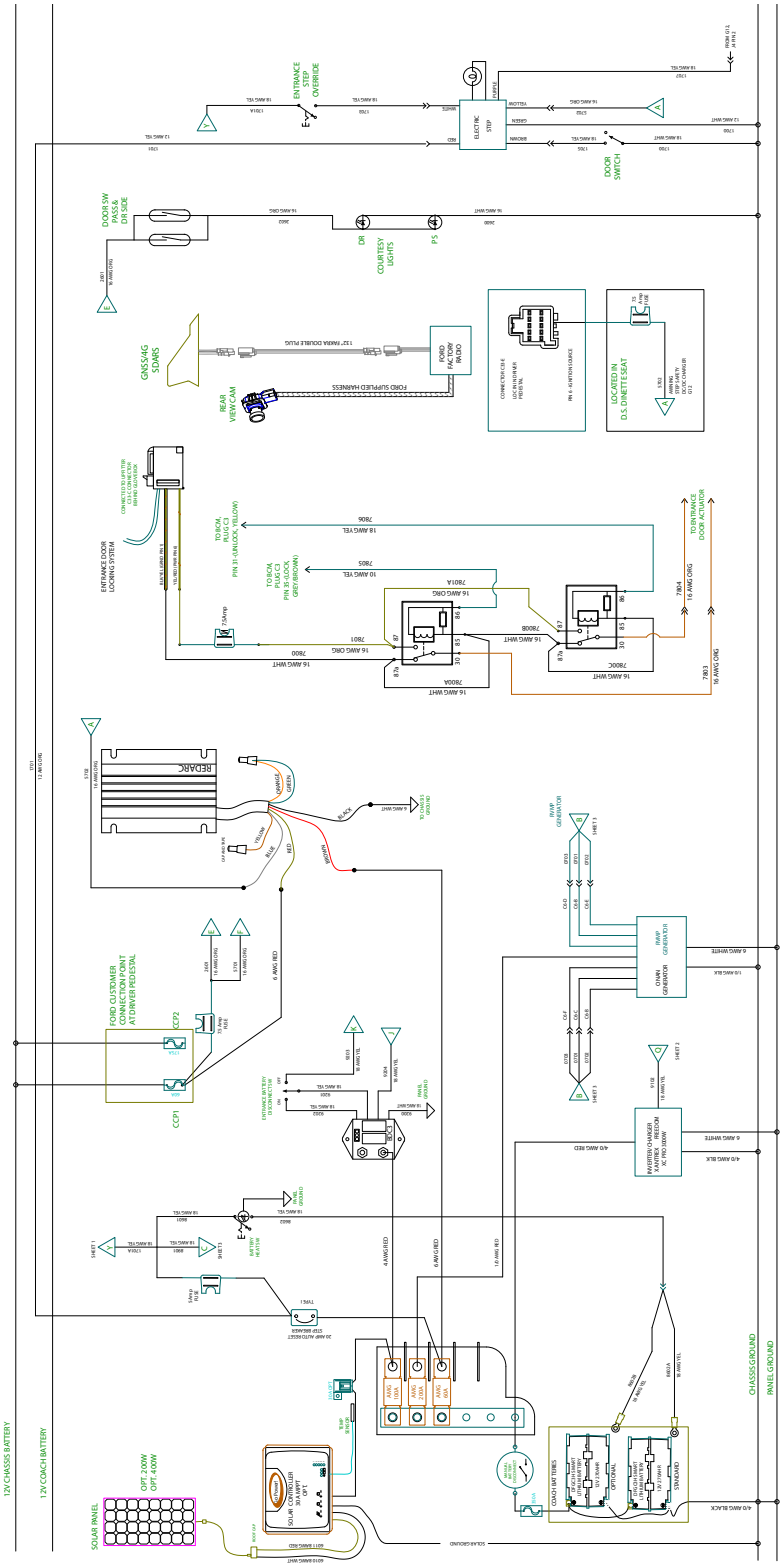

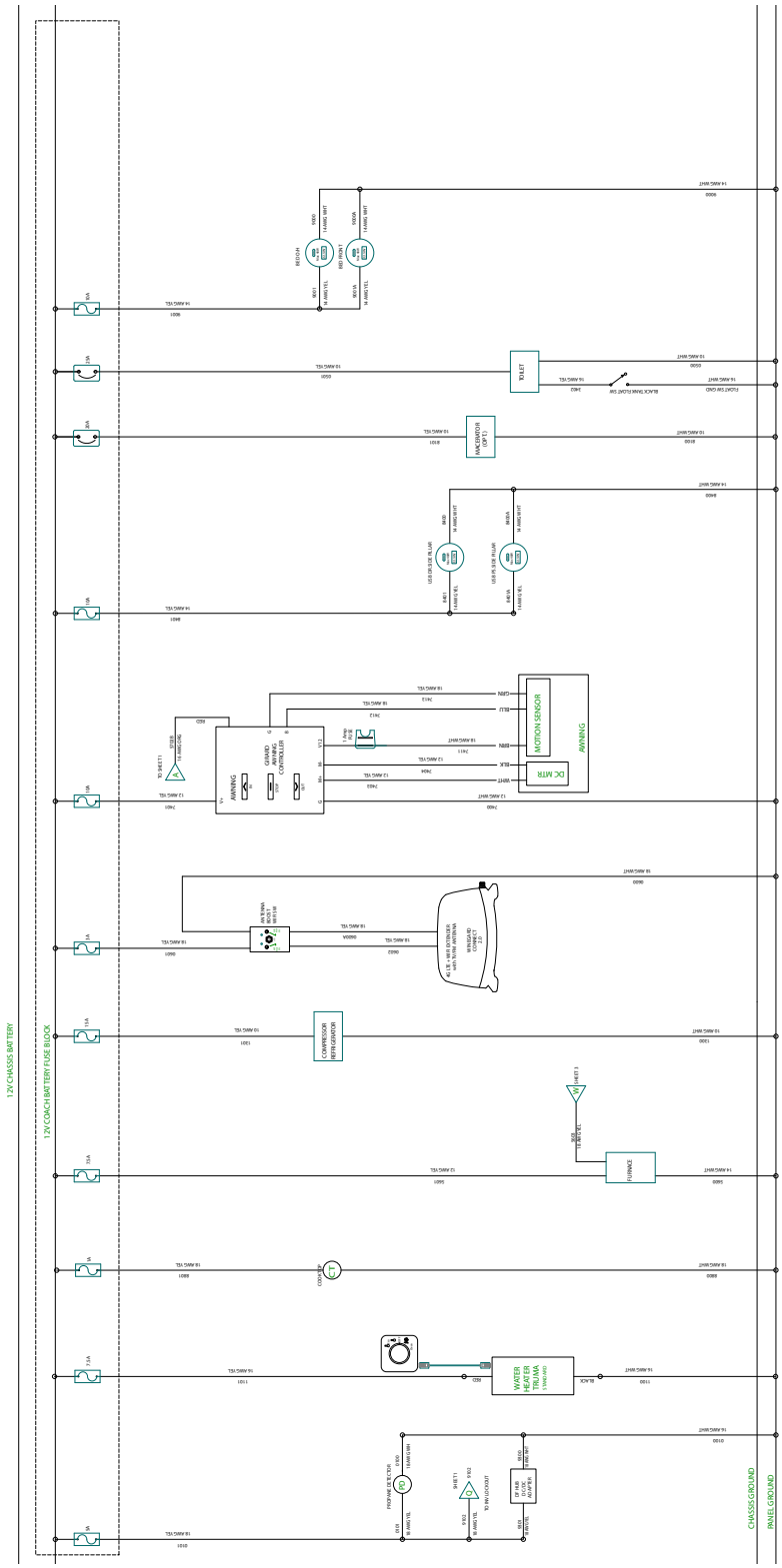
12V CHASSIS BATTERY
12V COACH BATTERY FUSE BLOCK
AWNING
MOTION SENSOR
DC MTR
WATER HEATER TRUMA
CHASSIS GROUND
PANEL GROUND

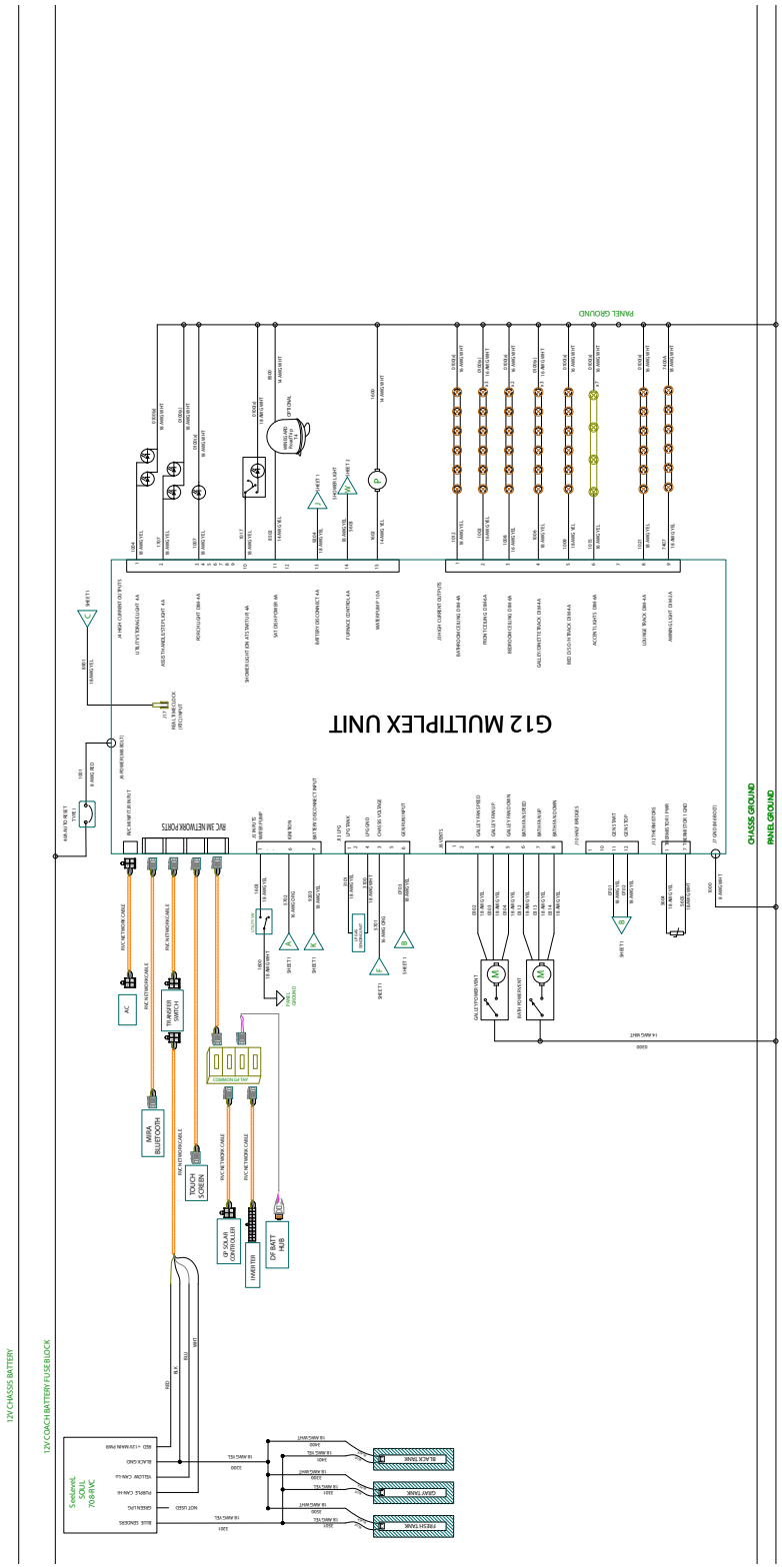
G12 MULTIPLEX UNIT
PANEL GROUND
CHASSIS GROUND
12V CHASSIS BATTERY
12V COACH BATTERY FUSEBLOCK

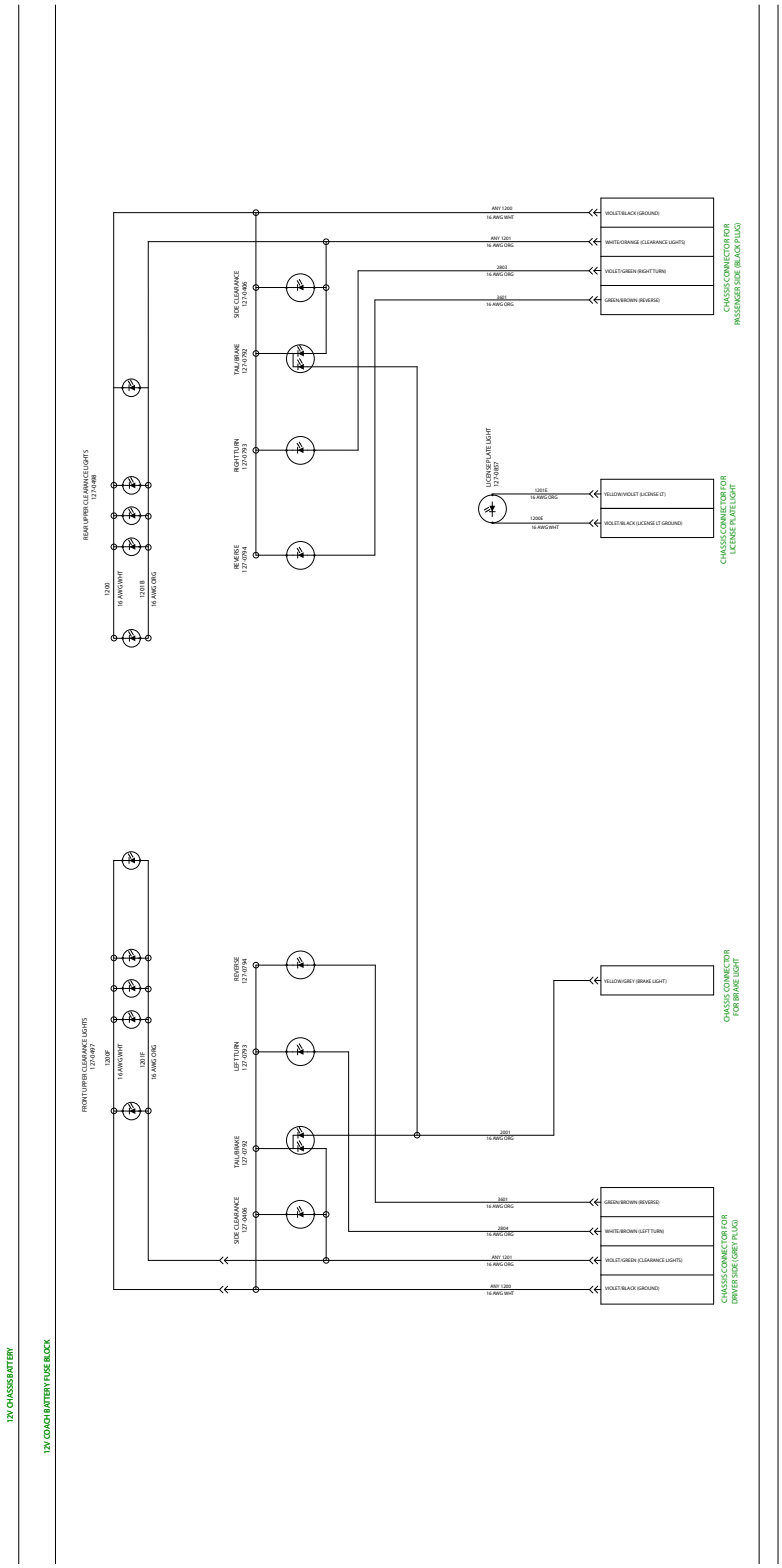
12V CHASSIS BATTERY
12V COACH BATTERY FUSE BLOCK
REAR UPPER CLEARANCE LIGHTS 127-0488
1200 16 AWG WHT
1201B 16 AWG ORG
SIDE CLEARANCE 127-0496
TAIL/BRAKE 127-0792
RIGHT TURN 127-0793
REVERSE 127-0794
LICENSE PLATE LIGHT 127-0807
ANY 1200 16 AWG WHT
ANY 1201 16 AWG ORG
2803 16 AWG ORG
3601 16 AWG ORG
VIOLET/BLACK (GROUND)
WHITE/ORANGE (CLEARANCE LIGHTS)
VIOLET/GREEN (RIGHT TURN)
GREEN/BROWN (REVERSE)
CHASSIS CONNECTOR FOR PASSENGER SIDE (BLACK PLUG)
12010 16 AWG ORG
12000 16 AWG WHT
YELLOW/VIOLET (LICENSE LT)
VIOLET/BLACK (LICENSE LT GROUND)
CHASSIS CONNECTOR FOR LICENSE PLATE LIGHT
FRONT UPPER CLEARANCE LIGHTS 127-0487
1201F 16 AWG WHT
1201F 16 AWG ORG
LEFT TURN 127-0793
2001 16 AWG ORG
YELLOW/GREY (BRAKE LIGHT)
CHASSIS CONNECTOR FOR BRAKE LIGHT
3601 16 AWG ORG
2804 16 AWG ORG
ANY 1201 16 AWG ORG
ANY 1200 16 AWG WHT
GREEN/BROWN (REVERSE)
WHITE/BROWN (LEFT TURN)
VIOLET/GREEN (CLEARANCE LIGHTS)
VIOLET/BLACK (GROUND)
CHASSIS CONNECTOR FOR DRIVER SIDE (GREY PLUG)

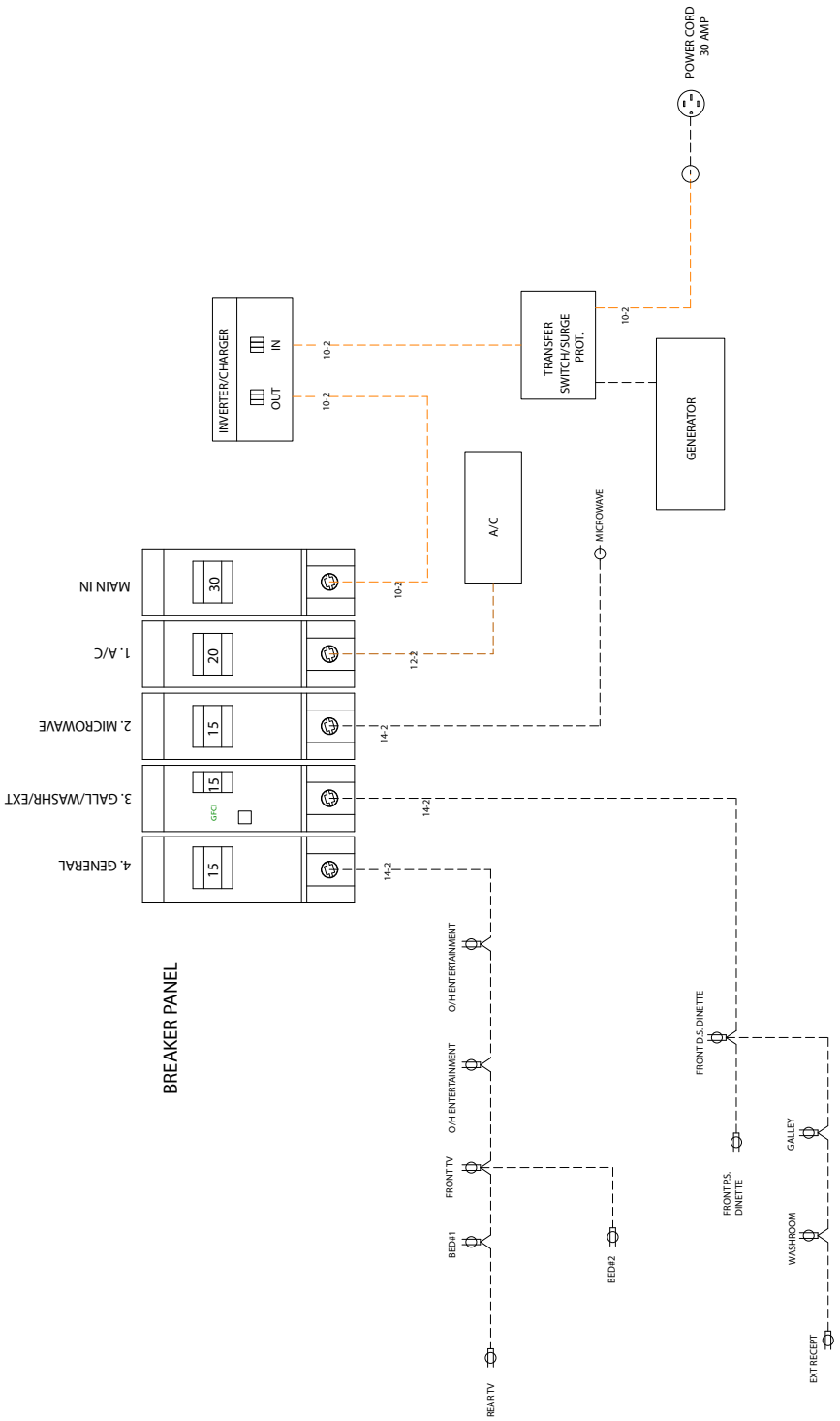
POWER CORD
30 AMP
TRANSFER
SWITCH/SURGE
PROT.
10-2
INVERTER/CHARGER
IN
OUT
10-2
10-2
GENERATOR
A/C
MICROWAVE
MAIN IN
30
10-2
1. A/C
20
12-2
2. MICROWAVE
15
14-2
3. GALL/WASHR/EXT
15
GFCI
14-2
4. GENERAL
15
14-2
BREAKER PANEL
O/H ENTERTAINMENT
O/H ENTERTAINMENT
FRONT TV
BED#1
REAR TV
BED#2
FRONT D.S. DINETTE
FRONT P.S.
DINETTE
GALLEY
WASHROOM
EXT RECEPT

PLUMBING

WATER LINES SCHEMATIC

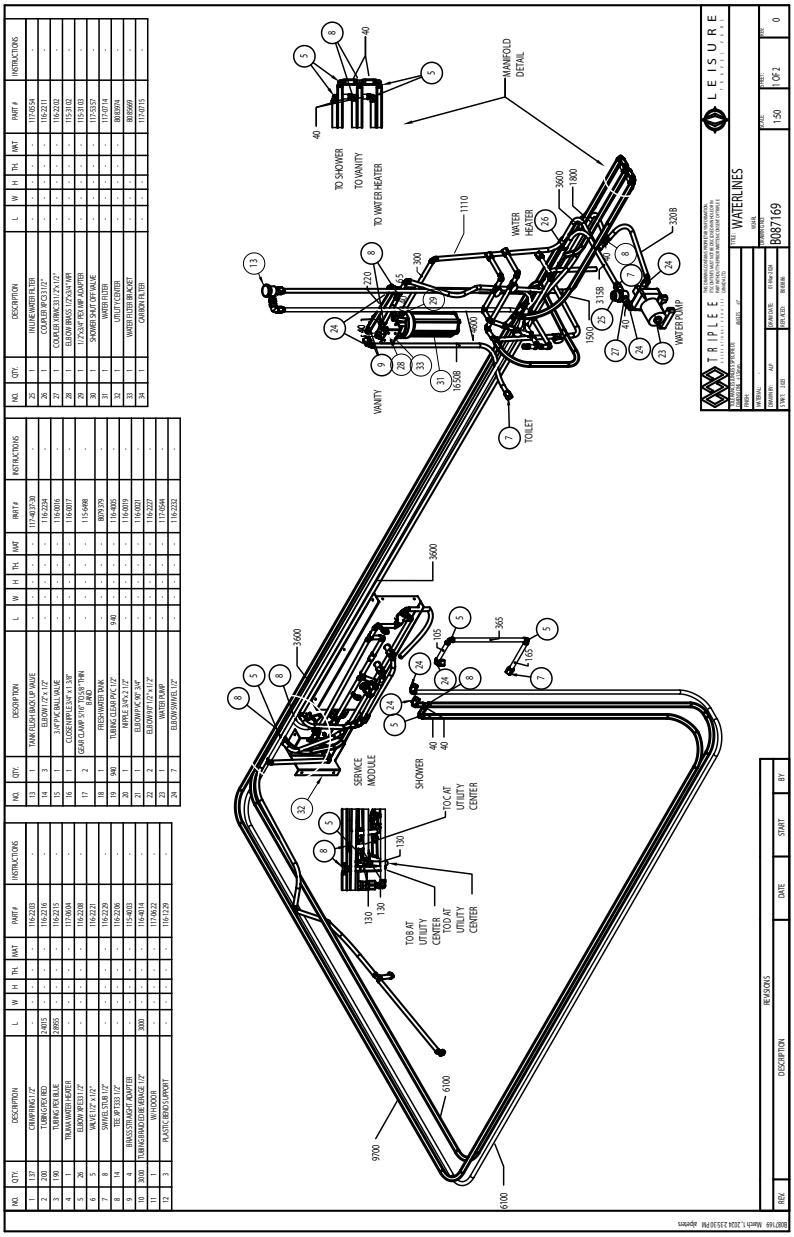

NO.	QTY.	DESCRIPTION	L	W	H	TH.	MAT.	PART #	INSTRUCTIONS
1	130	CRIMPRING 1/2"	-	-	-	-	-	109-2203	-
2	200	TUBING RED	24015	-	-	-	-	109-2216	-
3	190	TUBING RED BLUE	23895	-	-	-	-	109-2215	-
4	1	TRIAN WATER HEATER	-	-	-	-	-	115-0034	-
5	24	ELBOW BRASS 1/2"	-	-	-	-	-	115-0108	-
6	5	VALVE 1/2 X 1/2"	-	-	-	-	-	109-2221	-
7	8	SWIVEL STUB 1/2"	-	-	-	-	-	109-2229	-
8	14	TEE 3/4"X3/4 1/2"	-	-	-	-	-	109-2206	-
9	4	BRASS STRAIGHT ADAPTER	-	-	-	-	-	115-4103	-
10	3600	TUBING BRAIDED DUTIE VERNGE 1/2"	3600	-	-	-	-	109-4014	-
11	1	WH HOOK	-	-	-	-	-	117-0622	-
12	1	PLASTIC GRATE 5 APART	-	-	-	-	-	109-1229	-
13	1	TANK FLUSH VALVE 3/4" VALVE	-	-	-	-	-	117-4019-30	-
14	3	ELBOW 1/2" x 1/2"	-	-	-	-	-	109-2224	-
15	1	3/4" PVC BALL VALVE	-	-	-	-	-	116-0016	-
16	1	CLOSE NIPPLE 3/4" x 1 3/8"	-	-	-	-	-	116-0017	-
17	2	CLEAN CLAMP 3/4" 1 1/16" THK. BAND	-	-	-	-	-	115-4498	-
18	1	FRESH WATER TANK	-	-	-	-	-	809-979	-
19	940	TUBING CLEAR PVC 1/2"	940	-	-	-	-	116-4015	-
20	1	NIPPLE 3/4"x 2 1/2"	-	-	-	-	-	116-0019	-
21	1	ELBOW 3/4" x 3/4"	-	-	-	-	-	116-0021	-
22	1	ELBOW 3/4" x 1/2"	-	-	-	-	-	116-0022	-
23	1	WATER PUMP	-	-	-	-	-	117-0564	-
24	2	ELBOW SWIVEL 1/2"	-	-	-	-	-	116-2232	-
25	1	INLINE WATER FILTER	-	-	-	-	-	117-0053-4	-
26	1	COUPLER 3/4"CS 3 1/2"	-	-	-	-	-	116-2211	-
27	1	COUPLER 1/4"MCS 3 1/2" x 1/2"	-	-	-	-	-	116-2210	-
28	1	ELBOW BRASS 1/2" x 3/4" MPT	-	-	-	-	-	115-3142	-
29	1	TEE 3/4" x 3/4" x 1/2" BRASS	-	-	-	-	-	115-0103	-
30	1	SHOWER 3/4 CET OFF VALVE	-	-	-	-	-	115-5357	-
31	1	WATER FILTER	-	-	-	-	-	117-0714	-
32	1	UTILITY CORNER	-	-	-	-	-	B08974	-
33	1	WATER FILTER BRACKET	-	-	-	-	-	B08969	-
34	1	CARBON FILTER	-	-	-	-	-	117-0715	-

REV.	DESCRIPTION	DATE	START	BY
	REVISIONS			

DRAWN:	AJP	SCALE:	1-50
CHK'D:	JSD	DRAWING #:	B087169
APPROVED:	AJP	SHEET:	1 OF 2
MATERIAL:		REV:	0

B087169 March 1, 2024 3:36:09 PM aprentis

DRAIN LINE SCHEMATIC

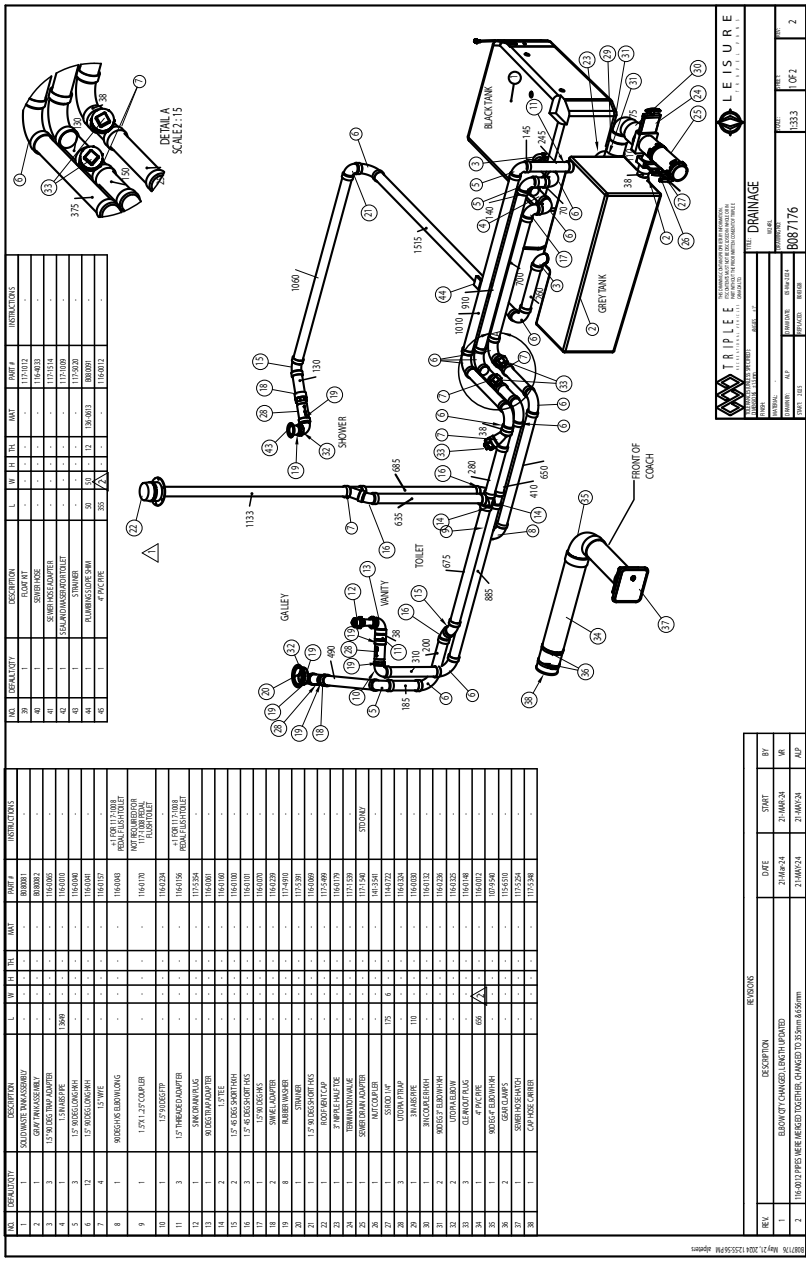

ENTERTAINMENT

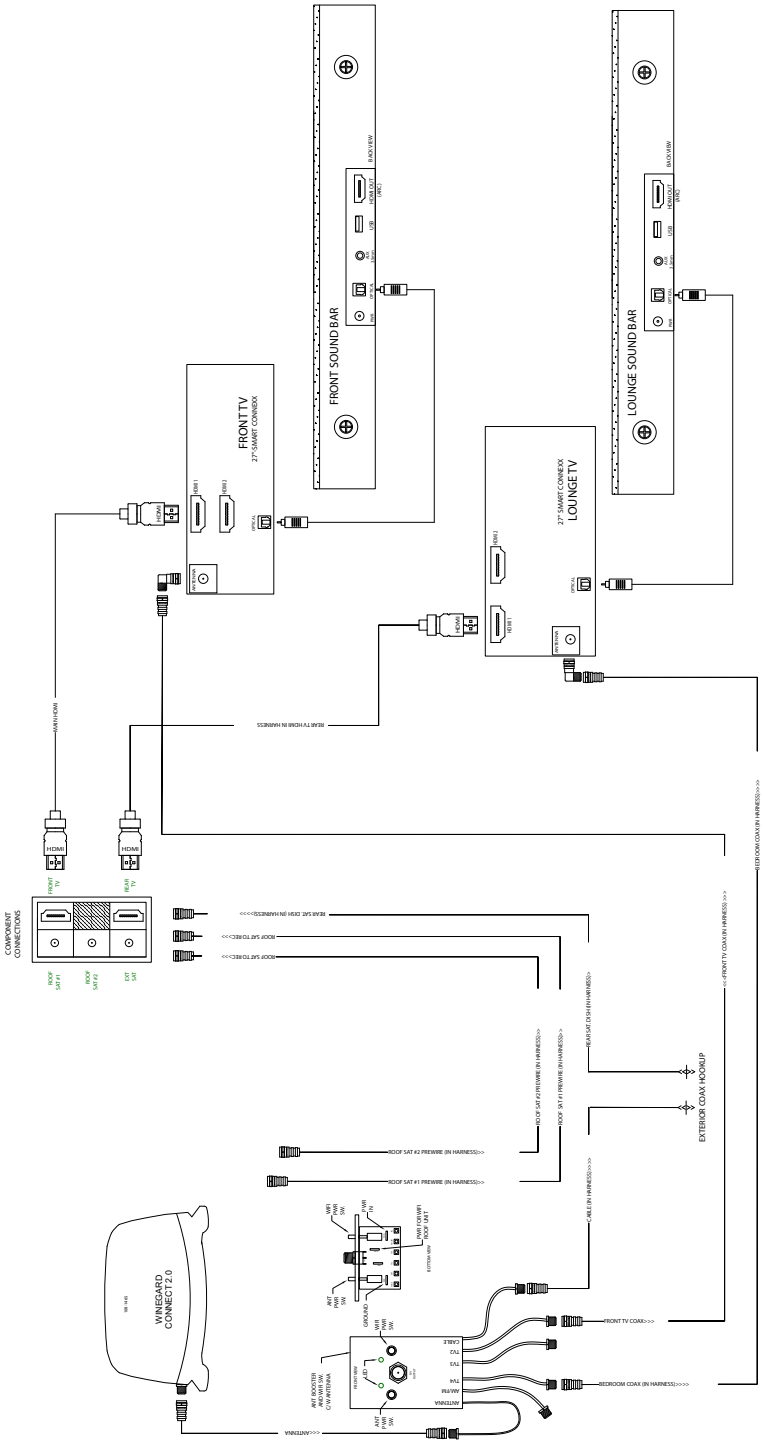

SATELLITE PRE-WIRE

If your coach did not come with the optional satellite dish, it will be pre-wired for installation at a later date if you so choose. Location of the prewire will vary by floorplan.

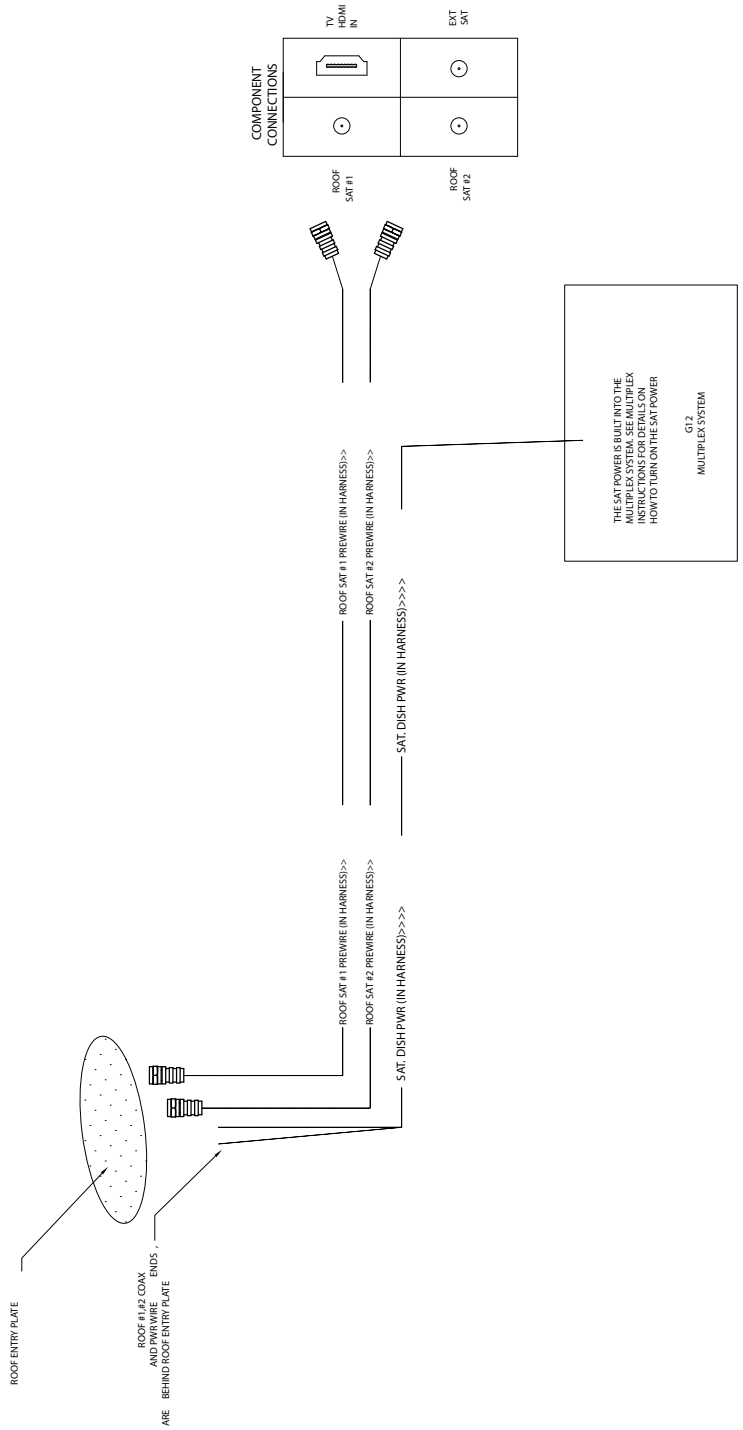

NOTES

NOTES

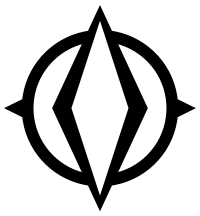

LEISURE

TRAVEL VANS

LTV Roadside Assistance

4287 Beltline Road, Box #198
Addison, TX 75001

for EMERGENCY ROADSIDE CALL
1•877•219•3831





Triple E Recreational Vehicles and Leisure Travel Vans are brands and trademarks of Triple E Canada Ltd.

301 Roblin Blvd., Box 1230 Winkler, MB Canada R6W 4C4
Telephone: 204-325-4361 Fax: 204-325-5241

US Address: P.O. Box 68 Walhalla, ND 58282

www.tripleerv.com • info@tripleerv.com • www.leisurevans.com • general@leisurevans.com

Product improvement is a continuing process at Triple E Recreational Vehicles.
We reserve the right to change specifications, operating instructions, standards and options on any products without prior notice. The information, illustrations and pictures within this document are current at the time of printing.

Copyright, Triple E Canada Ltd.
P/N 146-4607-SEP24

Printed in Canada